Bass 3/4 When the Battles Over

Bass

The Guard Pipes and Drums

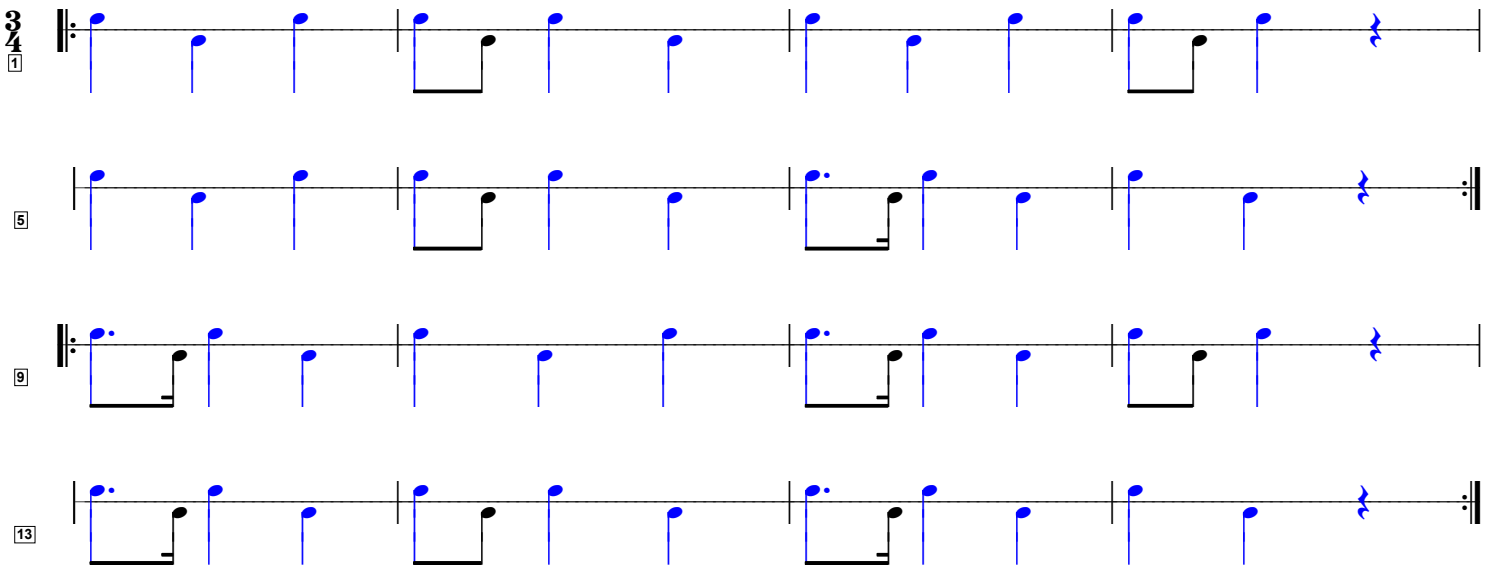

Bass 3/4 Heroes of the Hook

Bass
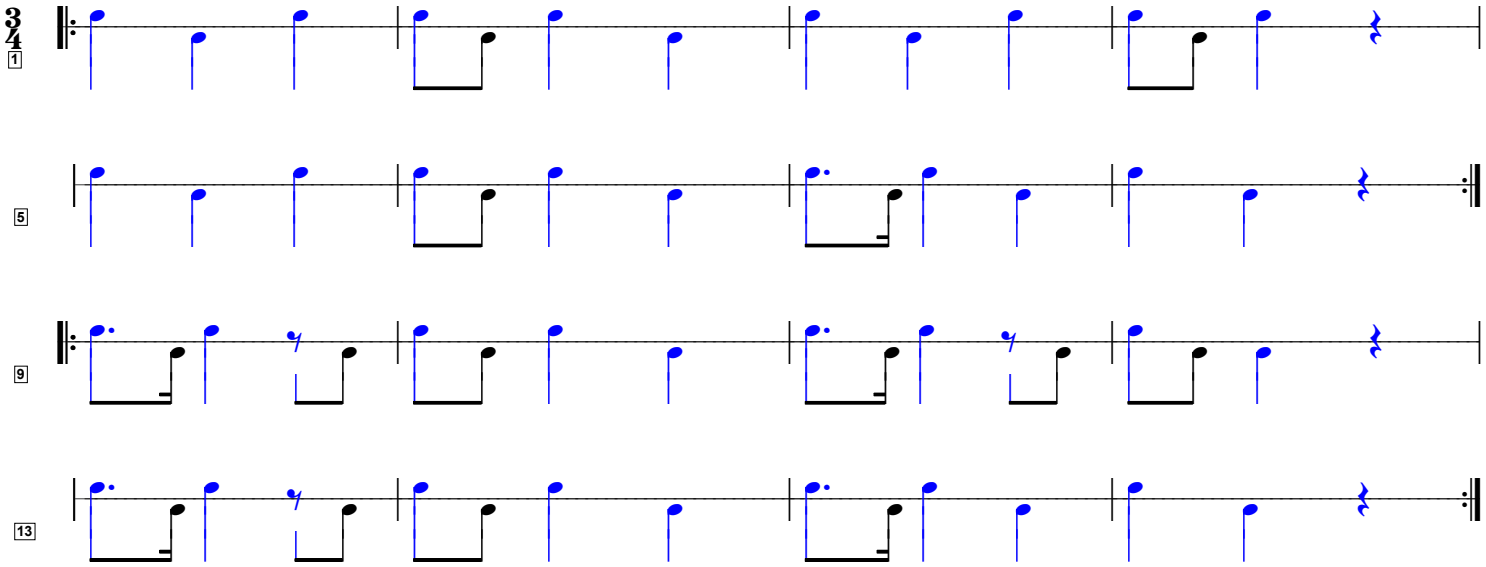
The Guard Pipes and Drums